ILVE DISHWASHERS

Semi-integrated Dishwasher

IVSI X6

ILVE

SIZE mm	598W x 550D (+20mm door) x 815H
FINISH	stainless steel interior and control panel, door panel supplied and fitted by builder
CAPACITY	15 place settings
FEATURES	• 8 wash programs 47 dBA • delay start 1–24 hours • third layer cutlery basket • height-adjustable upper basket • Aqua-stop water safety (anti-overlfow) device • Turbo drying system • easy-slide cutlery baskets • LED display • ECO wash option • tablet wash program • cold water connection
POWER	10 amp, 3-pin plug

PROGRAM	TYPE	CYCLE	DETERGENT pre/main gr	DURATION minutes	ENERGY kW/hr	WATER litres	RINSE AID
auto — Auto AUTO	auto sensing wash — light, normal or heavily soiled dishes, with or without dried-on food	prewash 45°C autowash 50–60°C rinse/rinse 60°C drying	5/28.75 or tablet	120–170	1.1–1.4	10–13.5	√
intensive	for heaviest soiled loads, eg pots, pans, casserole dishes, and dried-on food	prewash 50°C wash 55°C rinse/rinse/rinse 65°C drying	5/28.75 or tablet	155	1.45	17.0	√
heavy	for heavily soiled loads such as pots, plates, glasses and lightly soiled pans	prewash 45°C wash 55°C rinse/rinse 60°C drying	5/28.75 or tablet	170	1.15	13.5	√
normal*	for normal soiled loads such as plates, glasses, bowls and lightly soiled pans	prewash/wash 55°C rinse/rinse 45°C drying	5/28.75 or tablet	175	0.62	12.0	√
glass	for lightly soiled crockery and glass	prewash/wash 40°C rinse/rinse 60°C drying	5/28.75	115	0.85	13.5	√
60 min — 1 Hour 1h	for lightly soiled loads that do not need drying	prewash 50°C/wash 60°C rinse 50°C drying	5/28.75	60	0.80	9.0	√
rapid	a shorter wash for lightly soiled loads that do not need drying	wash 40°C rinse/rinse 45°C	20	40	0.50	10.0	
soak	to rinse dishes that you plan to wash later that day	prewash		8	0.01	3.8	

* AS/NZS 2007.1: Test cycle program
√ Rinse Aid required

ILVE 2 YEARS PARTS & LABOUR WARRANTY

WATER RATING 12.0

ENERGY RATING

Semi-integrated Dishwasher

IVSI X6

ILVE

IN

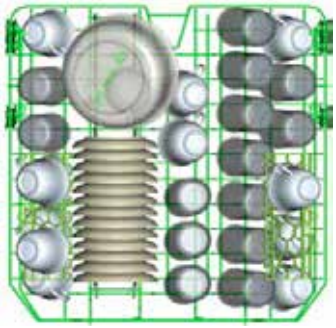

The upper basket is designed to hold more delicate and lighter dishware such as glasses, coffee and tea cups and saucers, as well as small plates and bowls and shallow pans (provided they are not too soiled).

IN

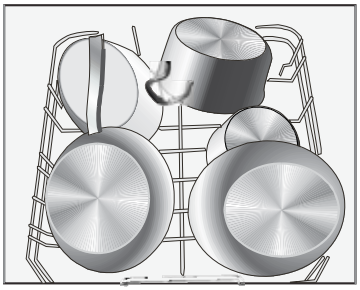

It is suggested that large items, and items that are most difficult to clean, are placed in the lower basket — eg pots, pans, lids, serving dishes etc. It is preferable to place serving dishes and lids on the side of the racks to avoid blocking rotation of the top spray arm.

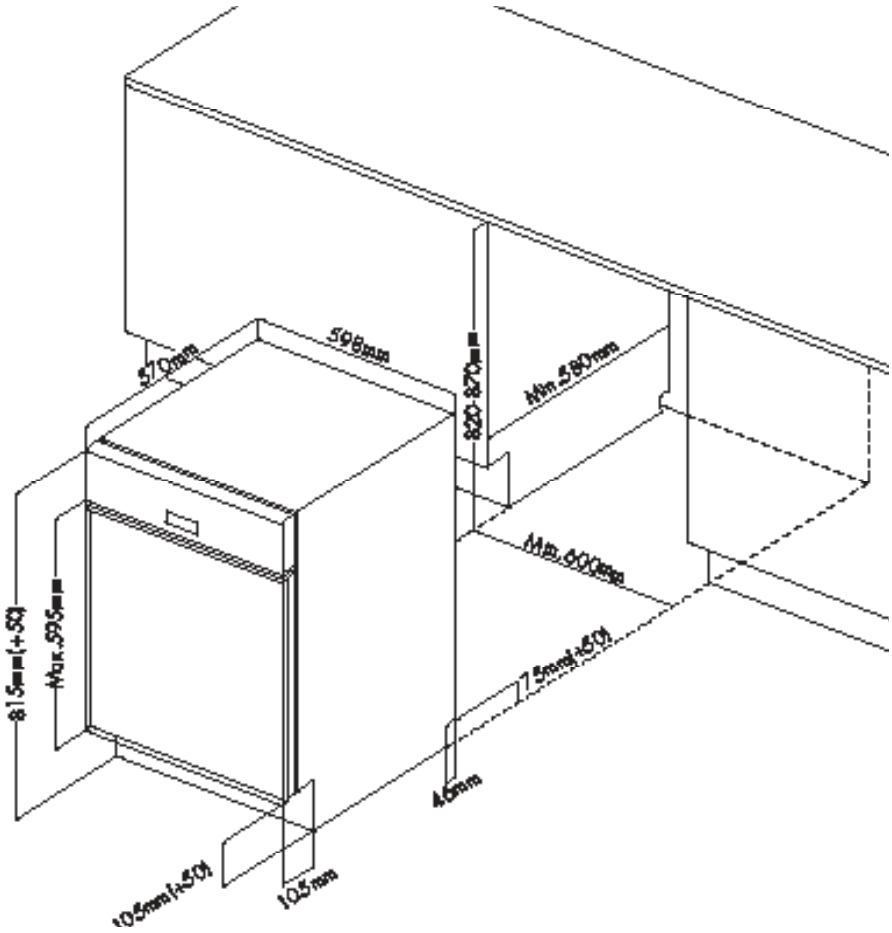

You can find us on:

facebook.com/ILVEappliances twitter.com/ILVE_appliances youtube.com/ILVEappliances livewithilve.com

Australia National Telephone Number 1300 MYILVE (694 583) New Zealand Telephone Number 0508 458 369
ILVE showrooms are open daily from 9am-5pm and Saturdays 10am-4pm (WA by appointment only on Saturdays)

ilve.com.au

NSW & ACT (Head Office)
48-50 Moore Street
Leichhardt
F 02 8569 4699

VIC, TAS & SA
1211 Toorak Road
Camberwell
F 03 9809 2155

QLD
1/42 Cavendish Road
Coorparoo
F 07 3397 0850

WA & NT
Unit 10/55 Howe Street
Osborne Park
F 08 9201 9188

New Zealand
PO Box 11.160
Sockburn Christchurch
F 03 344 5906

DISCLAIMER
Eurolinx PTY LTD, trading as ILVE Appliances, is continually seeking ways to improve the design specifications, aesthetics and production techniques of its products. As a result alterations to our products and designs take place continually. Whilst every effort is made to produce information and literature that is up to date, this brochure should not be regarded as an infallible guide to the current specifications, nor does it constitute an offer for the sale of any particular product. Product dimensions indicated in our literature is indicative only. Actual product only should be used to define dimension cutouts. Distributors, and retailers are not agents of ILVE Appliances and are not authorized to bind ILVE Appliances by any express or implied undertaking or representation.