RANGEHOODS

Canopy Rangehood

H10

ILVE

We all adore the scrumptious smells that billow from your favourite dishes in the kitchen,but not when those smells become stagnant within the home. ILVE's rangehoods are designed to stealthily keep your kitchen fresher and cleaner. ILVE rangehoods craftily stand above the rest. Their powerful highspeed fan removes cooking odours, smoke and vapour from the kitchen, while extremely fine filters trap all grime. It features intelligent auto fire shut-down sensors and a filter cleaning reminder light. The smart timer function can be set for an automatic turn off leaving you to your culinary masterpiece at hand. In-built Halogen Lights produce a natural brightness, illuminating your cooking area while the streamlined electronic control panel ensures whisper quiet air extraction is at your fingertips. Either as a visual focal point or discreetly integrated, it is easy to see that ILVE Rangehood's are built to extract!

Pictured: • H10 Canopy Rangehood

RANGEHOODS

Canopy Rangehood

H10

ILVE

Model H10
Canopy Rangehood

- Designed and purpose built for ILVE appliances. Recommended for barbecue and Tepanyaki models or wherever very high air extraction is required
- Built to exacting professional cooker hood standards
- Twin high velocity, double turbine fan, low decibel rating, 1200m3/h air extraction, optional in-line motor is available to assist air flow
- Electronic touch control variable speed with auto fi re shut-down sensors
- Programmable 5, 10, 15, 20 minute auto fan shut-down
- Halogen lighting
- Filter cleaning reminder light
- 18/10 stainless steel construction
- Touch control operation
- Sizes: 90cm, 100cm, 120cm
- Colour: Stainless Steel with a black control panel
- Ducting size: 150mm
- Suitable for ducting or recirculating
- Vented flue piece & charcoal filters required for recirculating

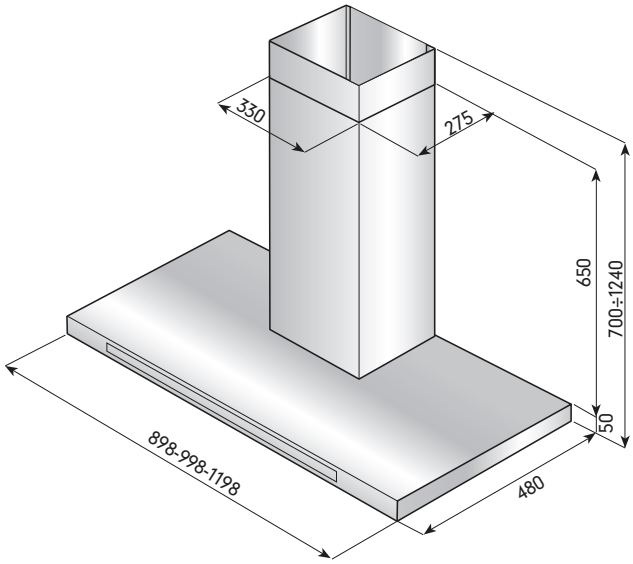

Model: H10 Canopy Hood
Size: various
Power standard: 10 Amp plug
Ducting size: 150mm
Extended flue pipe is available from ILVE

You can find us on:

facebook.com/ILVEappliances twitter.com/ILVE_appliances youtube.com/ILVEappliances livewithilve.com

Australia National Telephone Number 1300 MYILVE (694 583) New Zealand Telephone Number 0508 458 369
ILVE showrooms are open daily from 9am-5pm and Saturdays 10am-4pm (WA by appointment only on Saturdays)

ilve.com.au

NSW & ACT (Head Office)
48-50 Moore Street
Leichhardt
F 02 8569 4699

VIC, TAS & SA
1211 Toorak Road
Camberwell
F 03 9809 2155

QLD
1/42 Cavendish Road
Coorparoo
F 07 3397 0850

WA & NT
Unit 10/55 Howe Street
Osborne Park
F 08 9201 9188

New Zealand
PO Box 11.160
Sockburn Christchurch
F 03 344 5906

DISCLAIMER
Eurolinx PTY LTD, trading as ILVE Appliances, is continually seeking ways to improve the design specifications, aesthetics and production techniques of its products. As a result alterations to our products and designs take place continually. Whilst every effort is made to produce information and literature that is up to date, this brochure should not be regarded as an infallible guide to the current specifications, nor does it constitute an offer for the sale of any particular product. Product dimensions indicated in our literature is indicative only. Actual product only should be used to define dimension cutouts. Distributors, and retailers are not agents of ILVE Appliances and are not authorized to bind ILVE Appliances by any express or implied undertaking or representation.